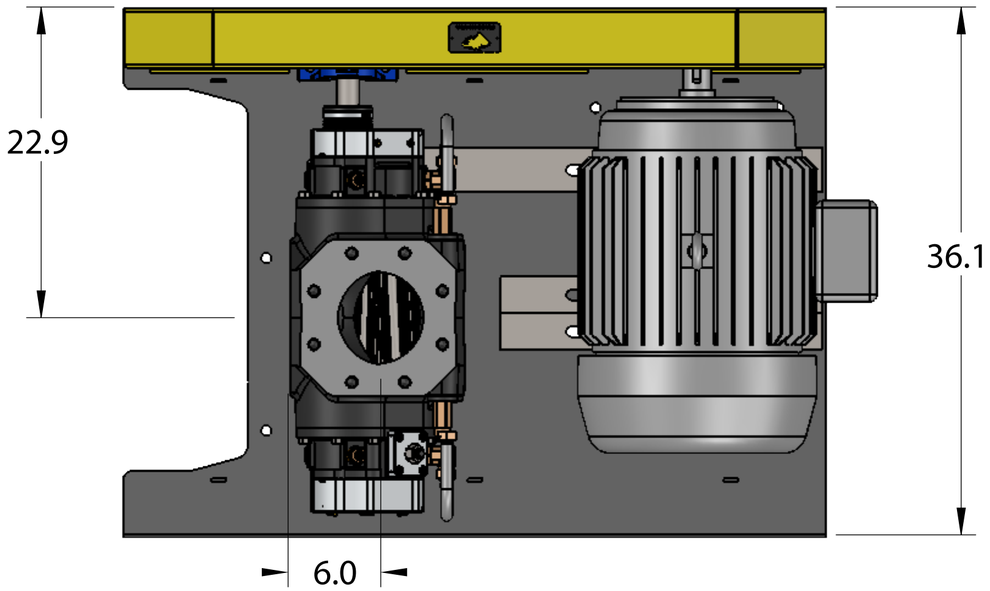

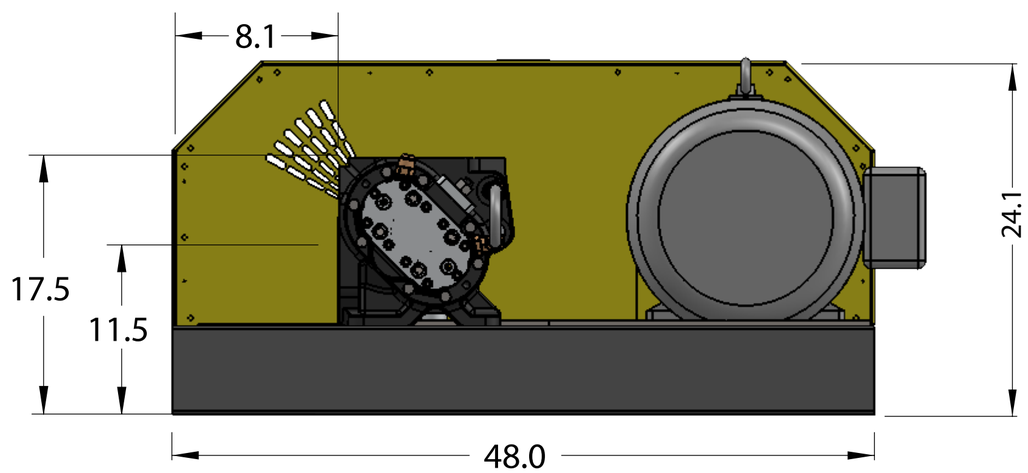

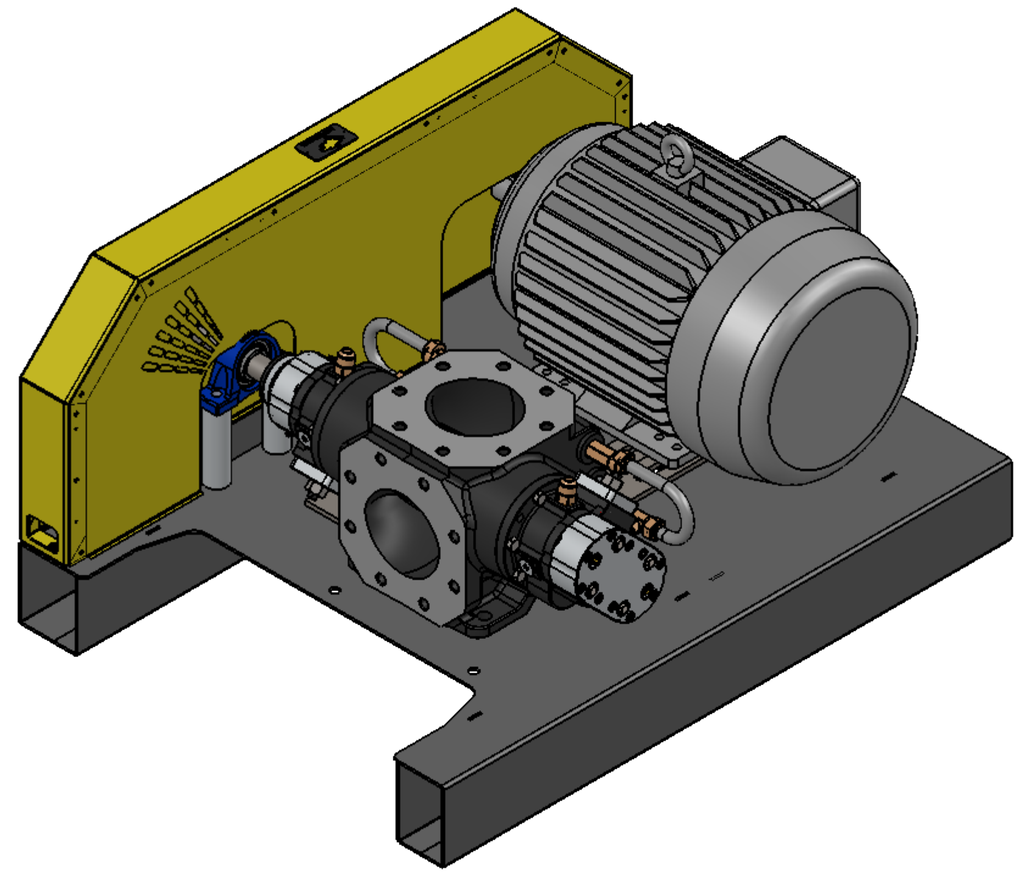

BearCat Pumps, LLC
1954 E. Deer Valley Rd. #103
PHOENIX AZ 85024
P623-587-1350
www.bearcatpumps.com

REV A